| Angle tolerance | | | | | Length tolerance | | | | | | |
|---|---|---|---|---|---|---|---|---|---|---|---|
| Arm length | >10 | >10–50 | >50–120 | >120–400 | Section length | >3 | >3–6 | >6–10 | >10–30 | >30–120 | >120 |
| Dimension without tolerance | ±1° | ±30' | ±20' | ±10' | Dimension without tolerance | ±0,10 | ±0,15 | ±0,18 | ±0,25 | ±0,35 | ±0,75 |
| Toler. for approx. dimension | ±4° | ±2° | ±1° | ±30' | Toler. for approx. dimension | ±0,50 | ±0,60 | ±0,75 | ±1,0 | ±1,7 | ±3,0 |

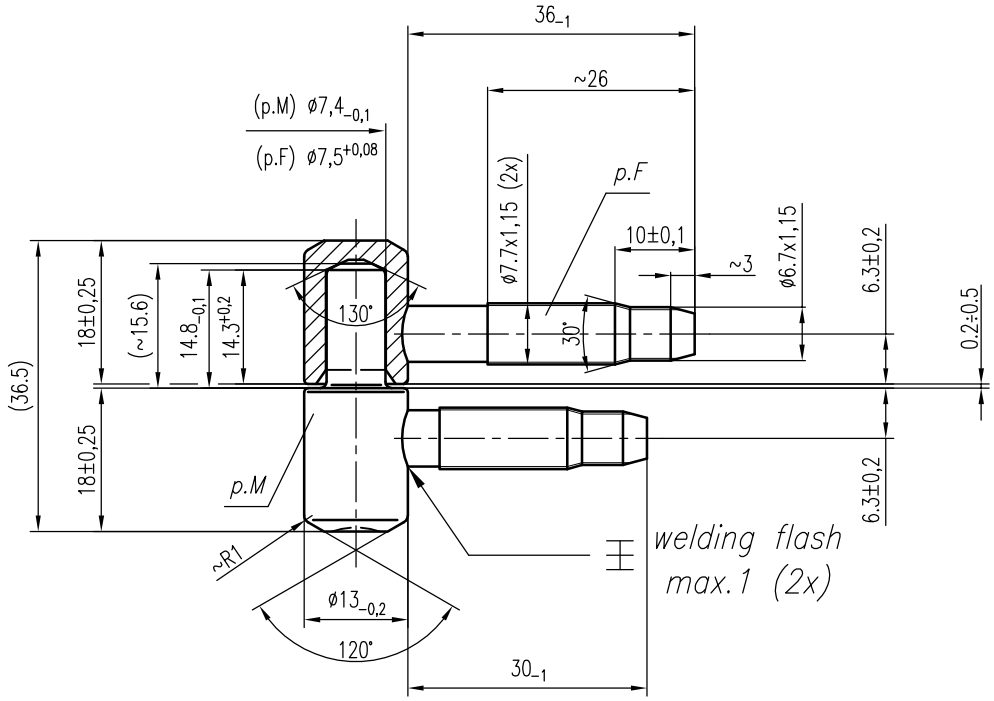


| | |
|---|---|
| p.F | 138–01–00/A |
| p.M | 138–02–00 |

| | | | | |
|---|---|---|---|---|
| | | | | Ref: 138–00–00/A |
| | | | | Weight: 0,0551 kg |
| | | | | CEMOM moatti / POL SOFT |
| P.0 | 29.06.2012 | D.J | Creation of the plan | 28 Allée du plateau, 93250 Villemomble, Tel. +33.1.49.35.08.54, Fax: +33.1.49.35.08.52 / Pol–Soft Sp. z oo, Dział Handlowy, Tel. 67 263 22 46, Fax: +48 67 263 30 09 |
| Index | Date | By | Plan changes | |
| | Scale: 1:1 | Range: Hinge | Material: Steel | Designed by: D.J / Verified by: D.J |

Ref: *138–00–00/A*

This document is the property of the enterprise CEMOM MOATTI/POLSOFT, IT CAN'T BE COMMUNICATED WITHOUT HIS AUTHORISATION