Angle tolerance					Length tolerance						
Arm length	>10	>10–50	>50–120	>120–400	Section length	>3	>3–6	>6–10	>10–30	>30–120	>120
Dimension without tolerance	±1°	±30'	±20'	±10'	Dimension without tolerance	±0,10	±0,15	±0,18	±0,25	±0,35	±0,75
Toler. for approx. dimension	±4°	±2°	±1°	±30'	Toler. for approx. dimension	±0,50	±0,60	±0,75	±1,0	±1,7	±3,0

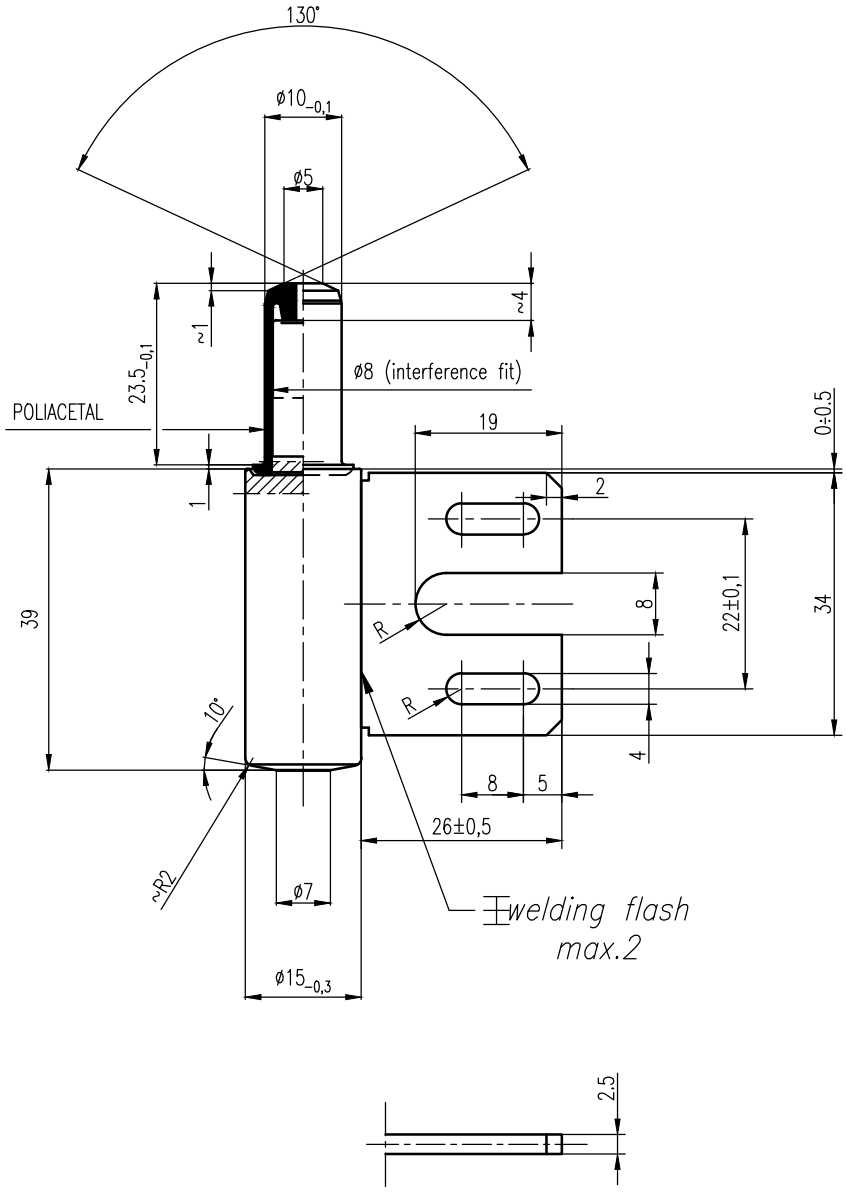

				Ref: 586-02-00/U
				Weight: – kg
	18.06.2019	D.J	updated	
P.0	03.03.2014	D.J	Creation of the plan	
Index	Date	By	Plan changes	
	Scale: 1:1	Range: Hinge	Material: Steel	

CEMOM Moatti
28 Allée du plateau
93250 Villemomble
Tel. +33.1.49.35.08.54
Fax: +33.1.49.35.08.52

POL SOFT
Pol-Soft Sp. z oo
Dział Handlowy
Tel. 67 263 22 46
Fax: +48 67 263 30 09

Designed by: D.J

Verified by: A.B

586-02-00/U

This document is the property of the enterprise CEMOM MOATTI/POLSOFT, IT CAN'T BE COMMUNICATED WITHOUT HIS AUTHORISATION